Current part is item (3) on diagram. Available at www.oshkoshequipment.com

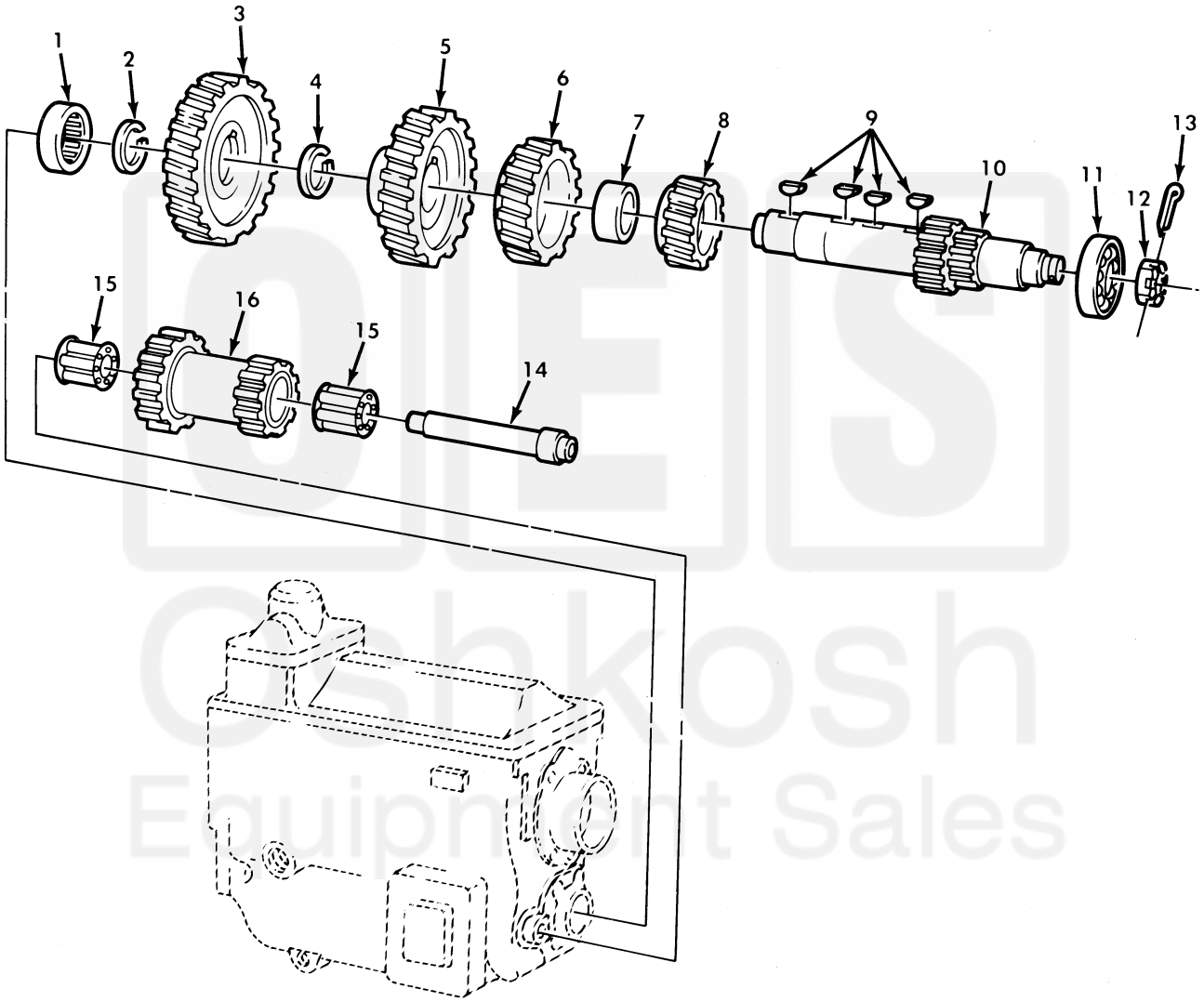

Figure 135. Transmission Countershaft, Idler Shaft, and Gears.

Current part is item (3) on diagram. Available at www.oshkoshequipment.com

Current part is item (3) on diagram. Available at www.oshkoshequipment.com

(1) ITEM NO	(2) SMR CODE	(3) NSN	(4) CAGEC	(5) PART NUMBER	(6) DESCRIPTION AND USABLE ON CODE (UOC)	(7) QTY
					GROUP 0701 TRANSMISSION SHAFTS	
					FIG. 135 TRANMISSION COUNTERSHAFT, IDLER SHAFT,AND GEARS	
1	PFHZZ	3110-00-117-0695	43334	1209TS	BEARING,ROLLER,CYLI.....	1
2	PAHZZ	5365-00-734-6786	19207	7346786	RING,RETAINING.....	1
3	PAHZZ	3020-00-971-5021	19207	8712209	GEAR,HELICAL.....	1
4	PAHZZ	5325-00-286-4406	24617	2345432	RING,RETAINING.....	1
5	PAHZZ	3020-00-971-5018	19207	8712207	GEAR,HELICAL.....	1
6	PAHZZ	3020-00-971-5017	19207	8712211	GEAR,HELICAL.....	1
7	PAHZZ	5365-00-734-6749	19207	7346749	SPACER,SLEEVE.....	1
8	PAHZZ	3020-00-294-6770	19207	7346776	GEAR,HELICAL.....	1
9	PAHZZ	5315-00-011-8002	21450	118002	KEY,WOODRUFF.....	4
10	PAHZZ	3040-00-734-7714	19207	7347714	GEARSHAFT,MULTIPLE.....	1
11	PAHZZ	3110-00-155-6741	02413	104-310-3	BEARING,BALL,ANNULA.....	1
12	PAHZZ	5310-00-734-6779	19207	7346779	NUT,PLAIN,SLOTTED,H.....	1
13	PAHZZ	5315-00-298-1499	96906	MS24665-360	PIN,COTTER.....	1
14	PAHZZ	3040-00-734-6750	19207	7346750	SHAFT,SHOULDERED.....	1
15	PAHZZ	3110-00-112-6565	24617	109397	BEARING,ROLLER,JOUR.....	2
16	PAHZZ	3020-00-734-7712	19207	7347712	GEAR CLUSTER.....	1

END OF FIGURE

Current part is item (3) on diagram. Available at www.oshkoshequipment.com